RCS 400 2.0

Press to select

- Start RCS 400
- Shut down/Restart
- Start PC POS
- Pick up transport box
- Troubleshooting
- Clean CAM
- Error handling
- Coin jam in CAM
- Coin dispenser jam
- PC POS, load paper
- Error list
- Symbols on screen
- Reset reminder

Cleaning

Coin Acceptance Module (CAM)

Coin jam

Coin Acceptance Module (CAM)

Coin dispensers

POS PC

Transport box

Press to select

- Start RCS 400
- Shut down/Restart
- Start PC POS
- Pick up transport box
- Troubleshooting
- Clean CAM
- Error handling
- Coin jam in CAM
- Coin dispenser jam
- PC POS, load paper
- Error list
- Symbols on screen
- Reset reminder

Shut Down/Restart machine

Caution! Only as the very last resort, shut down the PC/machine using the main switch. Shutting down by using the main switch might result in corrupt file system making the computer unusable.

In normal cases

1. Enter Operator menu by pressing **Administration** (to have this option you must have entered the RCS with an administrator ID) and then **Operator view**:
   – the Operator menu will now open.
2. Press **Exit program**.

   – "Close application?" is displayed, select "Yes" and press **Enter**.

   This will take you to Windows Desktop.

   Quickly press the ON/OFF button on the computer to shut down the computer.

   If this does not work see "Optional ways of shutting down the computer"
3. When the computer is shutdown power off the machine by pressing the ON/OFF button.

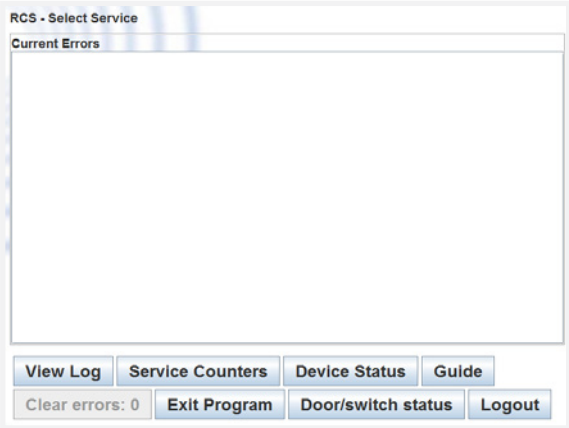

Optional ways of shutting down the computer

Press to select

- Start RCS 400
- Shut down/Restart
- Start PC POS
- Pick up transport box
- Troubleshooting
- Clean CAM
- Error handling
- Coin jam in CAM
- Coin dispenser jam
- PC POS, load paper
- Error list
- Symbols on screen
- Reset reminder

Optional ways of shutting down the computer

If normal shutting down described above does not work, optional ways of shutting down are listed below (if the first option does not work, go to the next option in descending order).

1. Quickly press the ON/OFF button on the computer.

   This will close down Orchard J and Windows in a controlled way and then shut down the computer.

2. If this does not work hold the ON/OFF button down for at least three seconds.

   This will shut down the computer.

3. When the computer is shutdown power off the machine by pressing the ON/OFF button.

Caution! Only as the very last resort, shutdown the machine using the main switch.

Caution! Wait 30 seconds before starting the computer and machine again.

Press to select

- Start RCS 400
- Shut down/Restart
- Start PC POS
- Pick up transport box
- Troubleshooting
- Clean CAM
- Error handling
- Coin jam in CAM
- Coin dispenser jam
- PC POS, load paper
- Error list
- Symbols on screen
- Reset reminder

Start POS PC

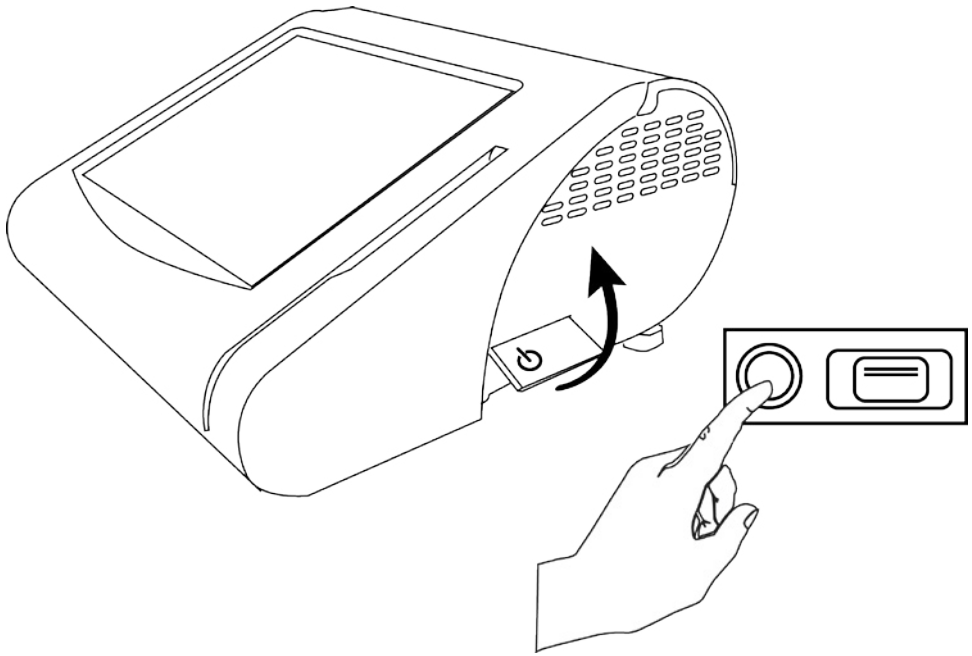

Load Paper

Press to select

- Start RCS 400
- Shut down/Restart
- Start PC POS
- Pick up transport box
- Troubleshooting
- Clean CAM
- Error handling
- Coin jam in CAM
- Coin dispenser jam
- PC POS, load paper
- Error list
- Symbols on screen
- Reset reminder

Emptying Transport Box

1. Log on by entering valid ID.
2. Select **Ship out transport box.**

   The door to the transport box will open automatically.
3. Replace the transport box with an empty one.

Note There is a sensor in the transport box compartment that will keep the door open until a transport box is put in place.

4. Close the door.

A receipt is printed detailing the content of the transport box.

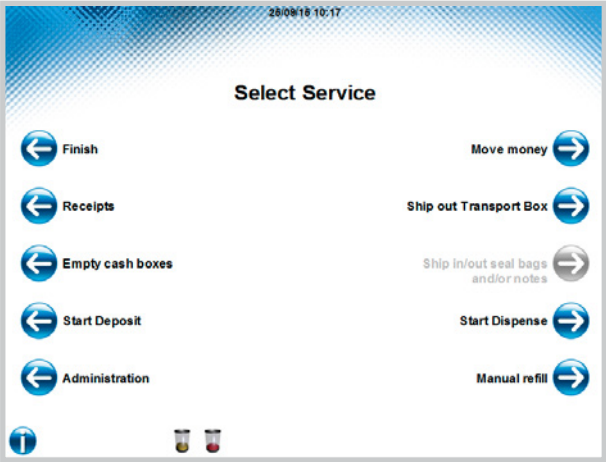

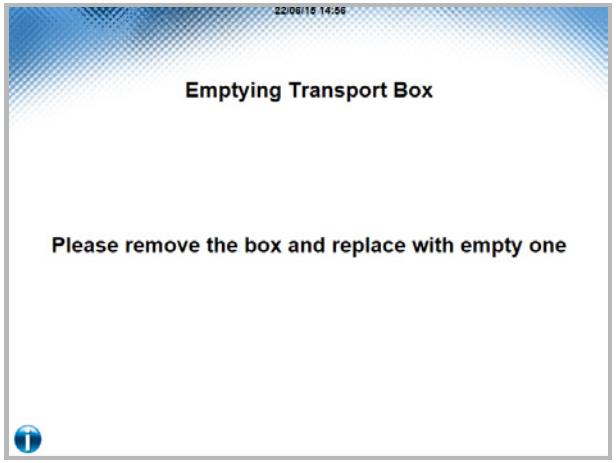

Press to select

- Start RCS 400
- Shut down/Restart
- Start PC POS
- Pick up transport box
- Troubleshooting
- Clean CAM
- Error handling
- Coin jam in CAM
- Coin dispenser jam
- PC POS, load paper
- Error list
- Symbols on screen
- Reset reminder

Troubleshooting

Problem	Analyze	Solution
No receipt	Receipt printer out of paper.	**Load POS PC printer**
Coin Acceptance Module (CAM) error	Coin jam.	**Remove jammed coin and reset CAM.**
	Not turned on.	Check blue LED code, check cables and make sure CAM is on.
Blank screen	Machine not turned on.	Check power supply.
	PC not turned on.	**Turn on the PC.**
Coin dispenser jam	A coin is jammed in one of the coin dispenser units.	**Remove the coin dispenser, remove the jam, refill, make a purge and deposit the coins.**

Press to select

- Start RCS 400
- Shut down/Restart
- Start PC POS
- Pick up transport box
- Troubleshooting
- Clean CAM
- Error handling
- Coin jam in CAM
- Coin dispenser jam
- PC POS, load paper
- Error list
- Symbols on screen
- Reset reminder

Error handling

1. Login as Administrator and open the Operator menu.
2. Read the error message. For more information about CAM error see **Error List**.

If possible solve the problem. Otherwise call for service.

Note! After the error has been solved you need to reset the devices.

3. Select **Device status** at the bottom of the window.
4. Starting from the top, press the **Resolve** button to open a step/by step guide.

Note! If the Resolve button is not available press the **Reset** button for each module which is reported to be in an error state.

This will reset the device, and if the fault is cleared, **OK** is displayed.

Note! When resetting the coin acceptor (CAM) all the coins in the hopper are rejected to the reject cup.

5. Press the **Done** button to return to the Operator Menu.
6. Press the **Clear Errors** button, all error files in the window should clear. “No errors” is displayed.
7. When **Clear Errors** is faded press **Logout** to return to operative mode.

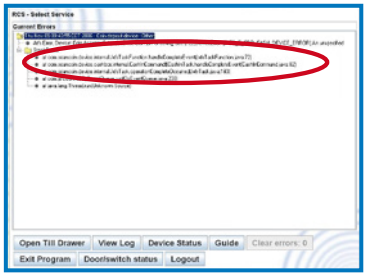

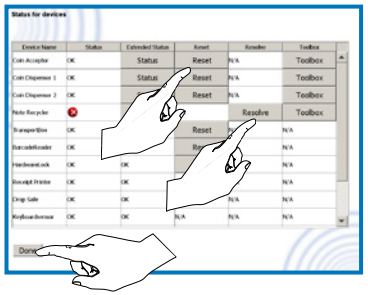

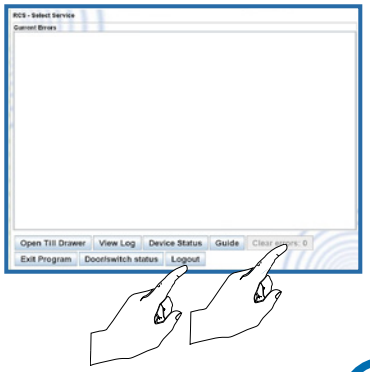

Errors not cleared

Press to select

- Start RCS 400
- Shut down/Restart
- Start PC POS
- Pick up transport box
- Troubleshooting
- Clean CAM
- Error handling
- Coin jam in CAM
- Coin dispenser jam
- PC POS, load paper
- Error list
- Symbols on screen
- Reset reminder

Errors not cleared

1. If you cannot clear the errors, **reboot the CAM**.

Note! You have to reset the CAM in the operator menu after a reboot, see **Error handling**.

2. If the errors remain **restart the machine**.

Caution! Shutting down the PC/machine by the main switch might result in corrupt file system making the computer unusable.

Press to select

- Start RCS 400
- Shut down/Restart
- Start PC POS
- Pick up transport box
- Troubleshooting
- Clean CAM
- Error handling
- Coin jam in CAM
- Coin dispenser jam
- PC POS, load paper
- Error list
- Symbols on screen
- Reset reminder

Coin jam in Coin Acceptance Module, CAM

Note! Make sure there are no coins left in the coin tray!
Remove the coin tray if there are coins in the coin tray.

1. Unlock and swing the cover open.
2. Remove the reject cup by pulling the green lever (A) and lift it off.

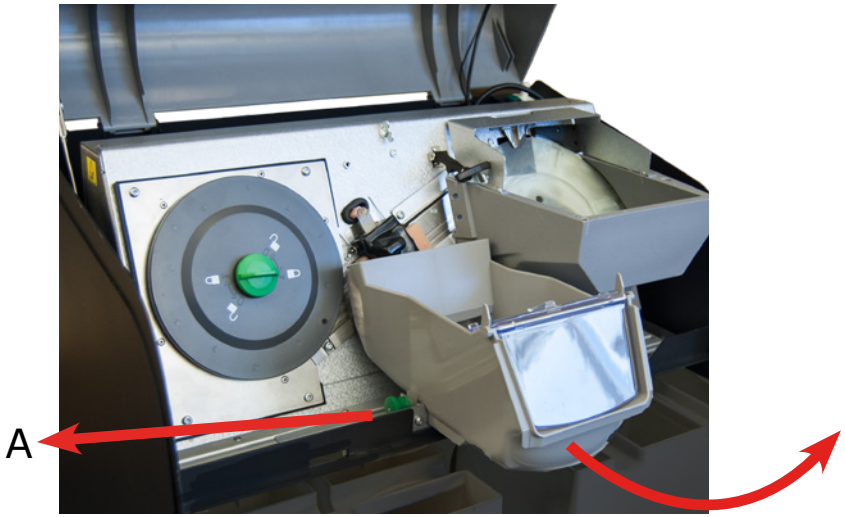

Press to select

- Start RCS 400
- Shut down/Restart
- Start PC POS
- Pick up transport box
- Troubleshooting
- Clean CAM
- Error handling
- Coin jam in CAM
- Coin dispenser jam
- PC POS, load paper
- Error list
- Symbols on screen
- Reset reminder

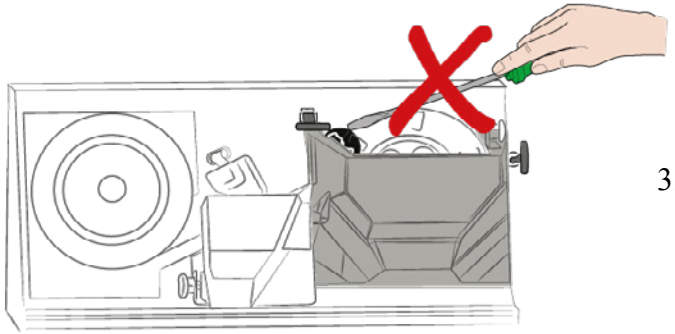

3. Check for coins between:
   - the hopper outlet and the sorting rail knife (A).
   - the sensor and the sorting rail knife (B).

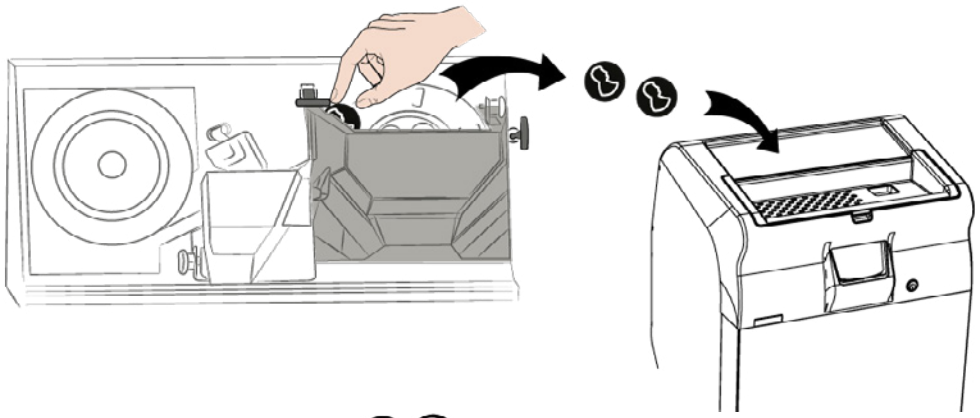

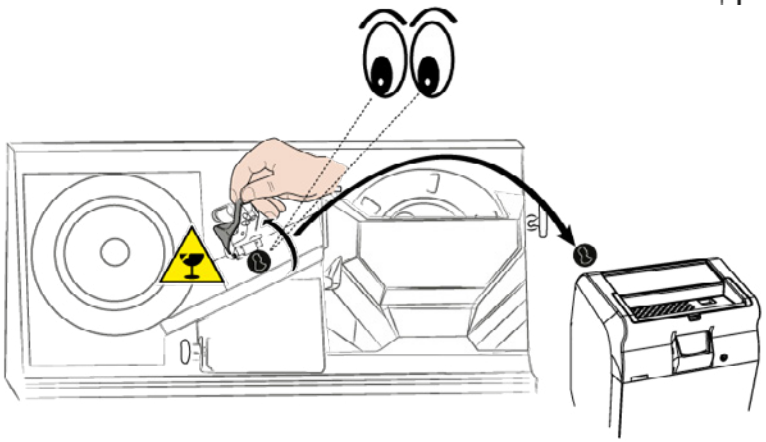

Press to select

- Start RCS 400
- Shut down/Restart
- Start PC POS
- Pick up transport box
- Troubleshooting
- Clean CAM
- Error handling
- Coin jam in CAM
- Coin dispenser jam
- PC POS, load paper
- Error list
- Symbols on screen
- Reset reminder

4. Remove the sorting disc cover.

   - Push the knob towards the sorting disc and turn it counterclockwise. Lift off the knob.

5. Check for coins between the sorting rail knife and sorting disc.

6. Put the sorting disc cover back as follows:
   - Align the slot in the knob with the slot in the disc.
   - Push the knob towards the sorting disc and turn clockwise.

7. Reset the CAM, see **Error Handling.**

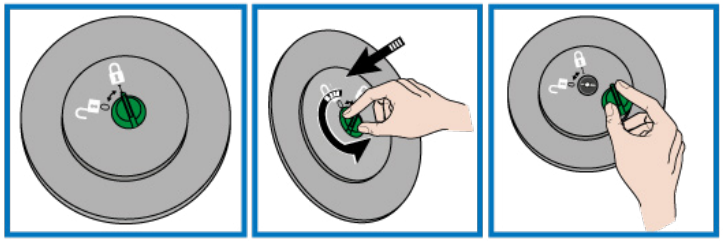

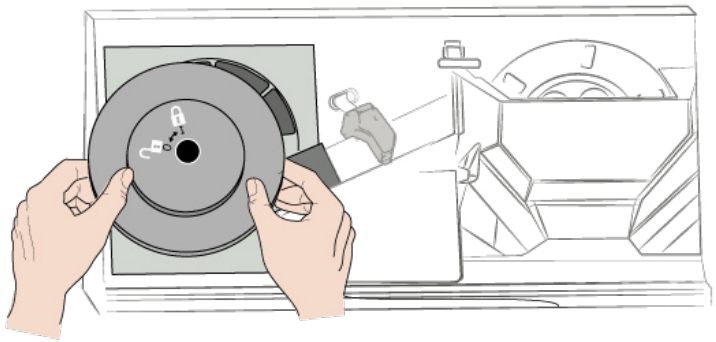

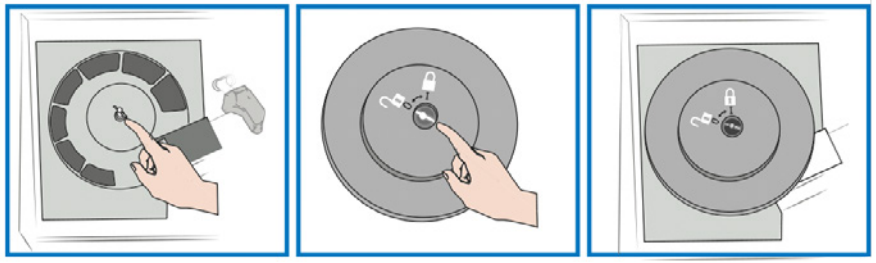

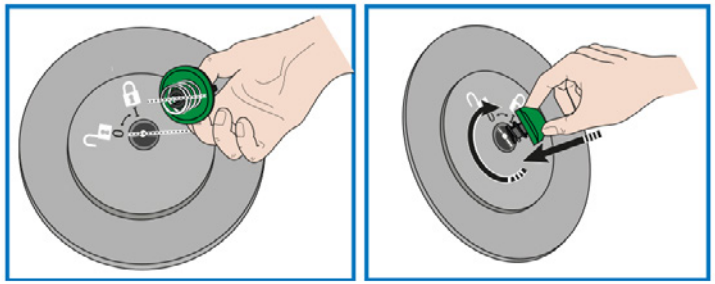

Press to select

- Start RCS 400
- Shut down/Restart
- Start PC POS
- Pick up transport box
- Troubleshooting
- Clean CAM
- Error handling
- Coin jam in CAM
- Coin dispenser jam
- PC POS, load paper
- Error list
- Symbols on screen
- Reset reminder

Clean CAM

Use a vacuum cleaner to remove any dust from the coin hopper.

Clean the rubber disc with a soft rag and a mild detergent.

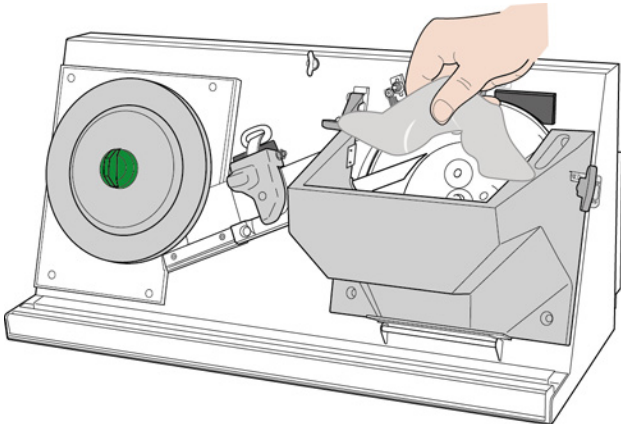

Cleaning sorting rail knife and sensor

Caution! Do not touch the front sensor circuit board or the components on its rear.

Caution! Fold the sensor back, but do not let it spring back or the machine may require re-calibration.

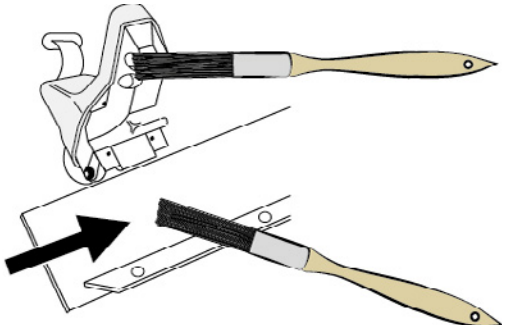

1. Clean the back sensor with a soft brush.
2. Also, use the brush to clean the cavities on the front sensor (at the arrows).

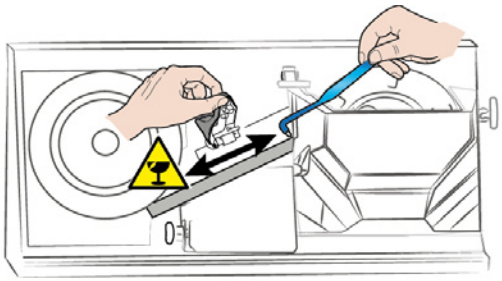

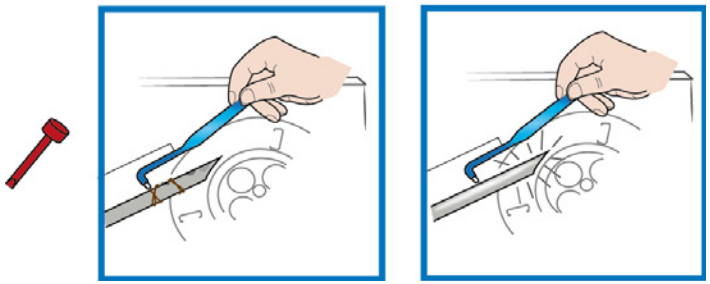

3. Clean the sorting rail knife with a stiff brush, a piece of lint-free cloth or the plastic screwdriver.

Cleaning coin rail and sorting disc

Press to select

- Start RCS 400
- Shut down/Restart
- Start PC POS
- Pick up transport box
- Troubleshooting
- Clean CAM
- Error handling
- Coin jam in CAM
- Coin dispenser jam
- PC POS, load paper
- Error list
- Symbols on screen
- Reset reminder

Cleaning coin rail and sorting disc

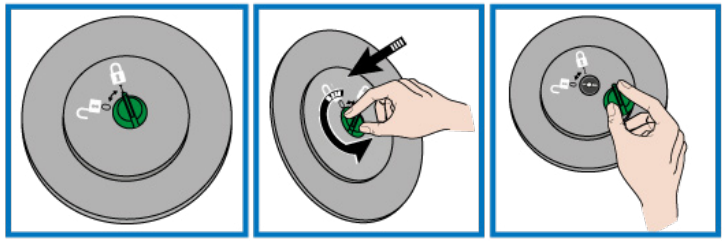

1. Remove the sorting disc cover.
   - Push the knob towards the sorting disc and turn it counterclockwise.
   - Lift off the knob.
2. Clean the coin rail and the sorting disc.

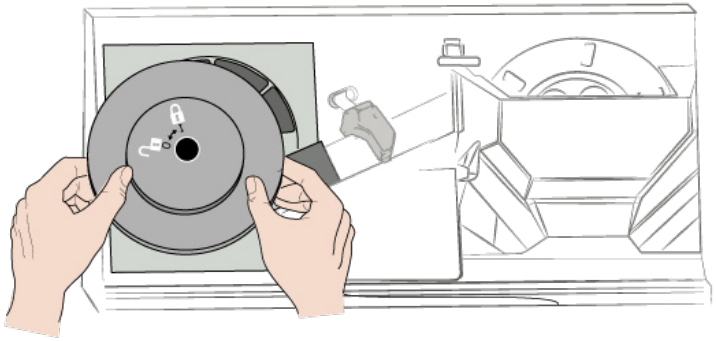

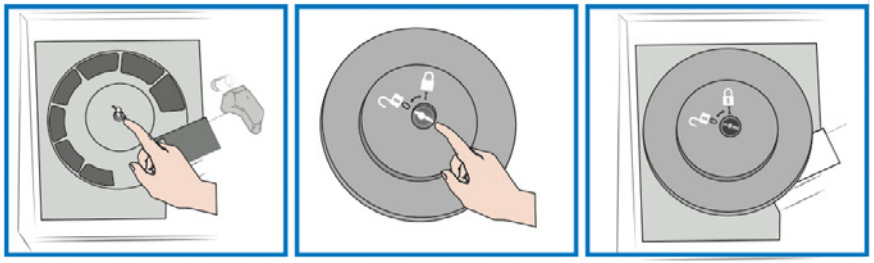

3. Put the sorting disc cover back as follows:
   - Align the slot in the knob with the slot in the disc.
   - Push the knob towards the sorting disc and turn clockwise.
4. Reset the CAM, see **Error Handling.**

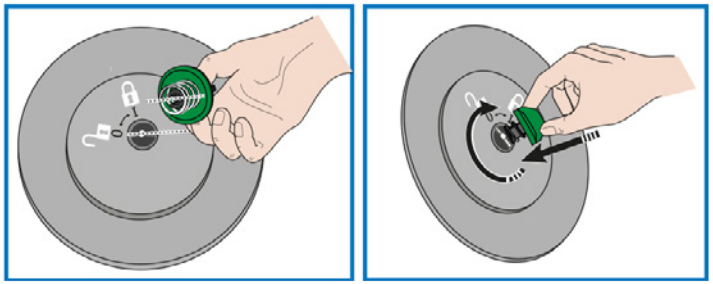

Cleaning sorting rail knife and sensor

Press to select

- Start RCS 400
- Shut down/Restart
- Start PC POS
- Pick up transport box
- Troubleshooting
- Clean CAM
- Error handling
- Coin jam in CAM
- Coin dispenser jam
- PC POS, load paper
- Error list
- Symbols on screen
- Reset reminder

Coin dispenser jam

Caution! Removal of the coin dispenser from the slide mount without disconnecting the power source first, may result in damage to the optical sensor.

WARNING!
Risk of entanglement and/or cutting!
Always remove the coin dispenser including the coin hopper and open up the dispenser to solve a jam.

Remove coin dispenser

Note! Make sure there are no coins left in the coin tray!

Remove the coin tray if there are coins in the coin tray.

Press to select

- Start RCS 400
- Shut down/Restart
- Start PC POS
- Pick up transport box
- Troubleshooting
- Clean CAM
- Error handling
- Coin jam in CAM
- Coin dispenser jam
- PC POS, load paper
- Error list
- Symbols on screen
- Reset reminder

1. Unlock and open the top cover.

2. Unlock, unfold and remove the lower cover.

3. Release the lever **A** on the coin dispenser.

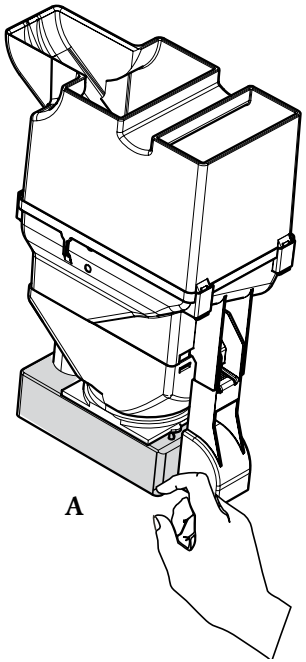

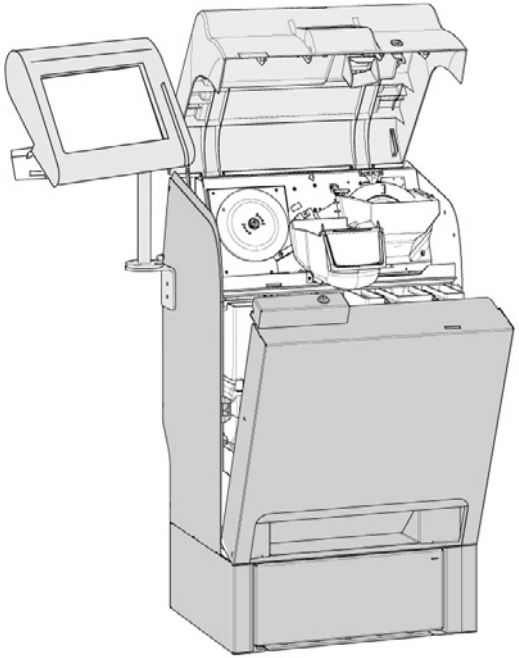

4. Slide the coin dispenser unit outwards to disconnect it from the power supply.

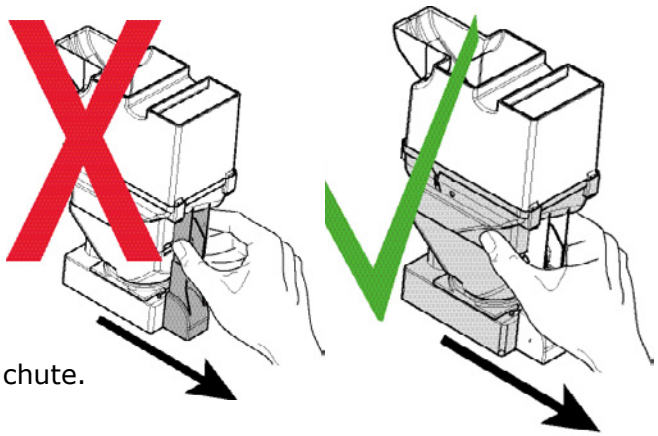

Caution! Do not pull the coin dispenser by the coin chute.

Press to select

- Start RCS 400
- Shut down/Restart
- Start PC POS
- Pick up transport box
- Troubleshooting
- Clean CAM
- Error handling
- Coin jam in CAM
- Coin dispenser jam
- PC POS, load paper
- Error list
- Symbols on screen
- Reset reminder

Note! To remove a coin dispenser unit from the rear row you first have to remove the coin dispenser units in the front row. Then unfold the slides to make room for the by pass chute and the rear coin dispenser units.

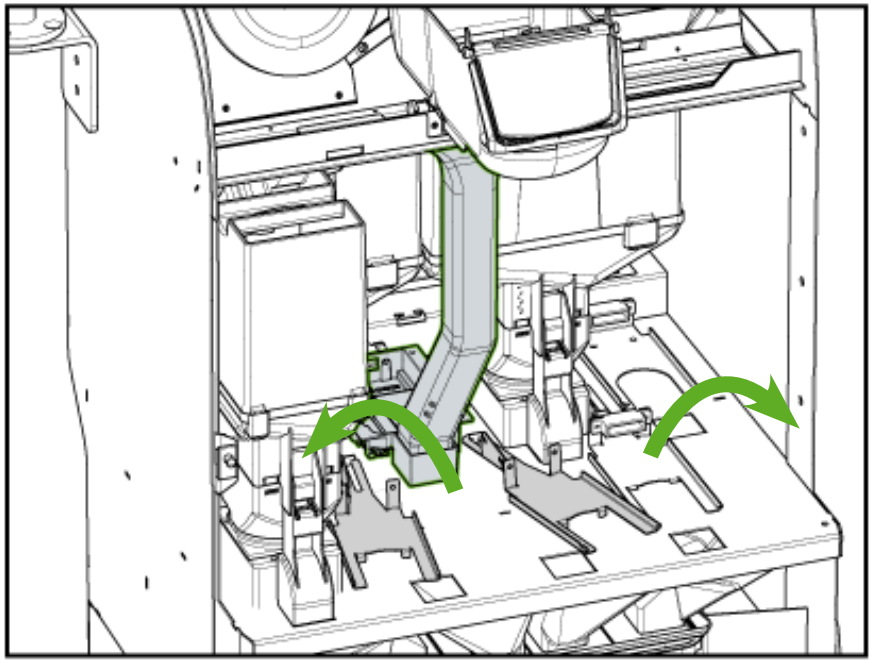

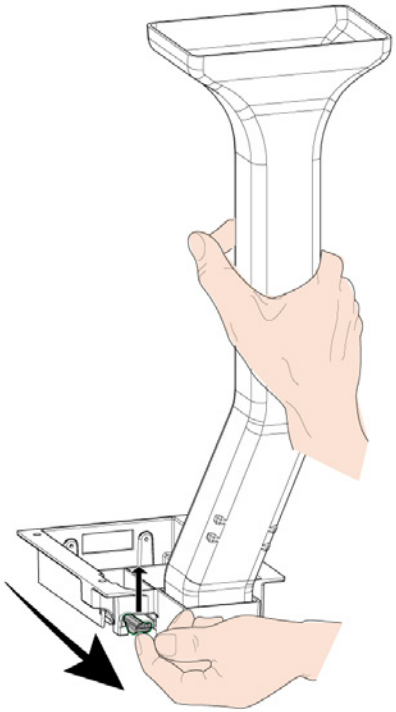

5. Lift and unfold the slides to reach the bypass chute and coin dispensers in the rear row.
6. Release the latch on the bypass chute by pressing it upwards.
7. Slide out the bypass chute.

Press to select

- Start RCS 400
- Shut down/Restart
- Start PC POS
- Pick up transport box
- Troubleshooting
- Clean CAM
- Error handling
- Coin jam in CAM
- Coin dispenser jam
- PC POS, load paper
- Error list
- Symbols on screen
- Reset reminder

8. Remove the coin chute.

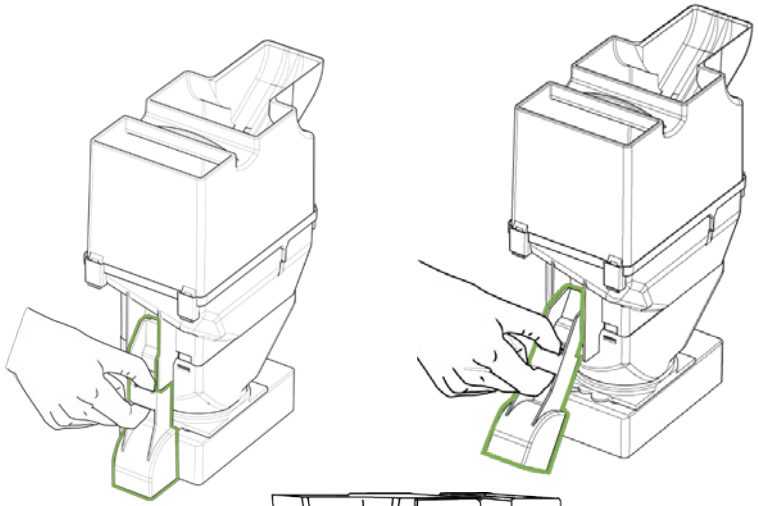

9. Unlock the coin dispenser.
There is one lock on each side.

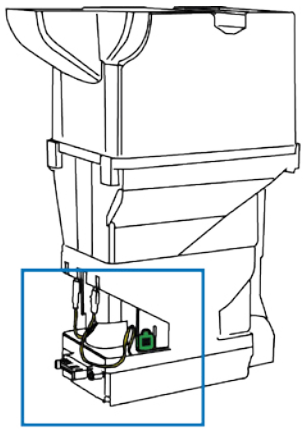

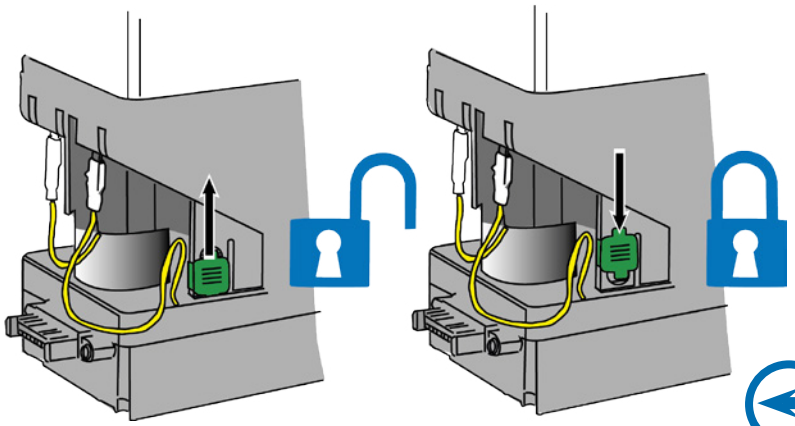

10. Press the catches on both sides of the hopper bowl and fold it up.

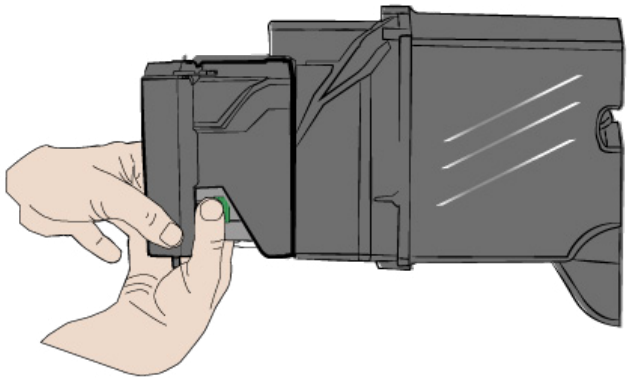

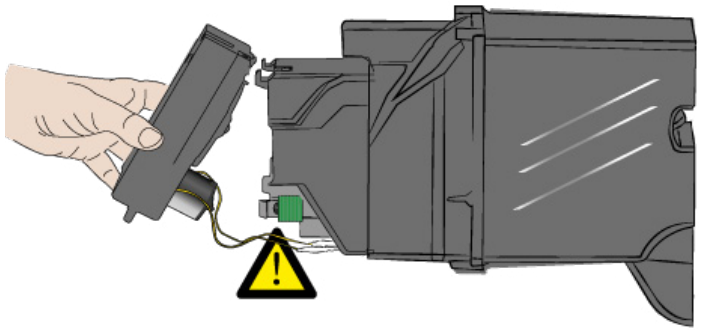

If needed, disconnect the two sensor wires.

Note

Be careful not to bend the sheet metal shield when connecting the sensor wires.

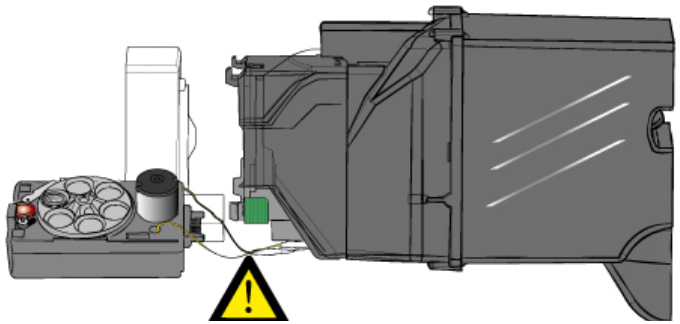

Press to select

- Start RCS 400
- Shut down/Restart
- Start PC POS
- Pick up transport box
- Troubleshooting
- Clean CAM
- Error handling
- Coin jam in CAM
- Coin dispenser jam
- PC POS, load paper
- Error list
- Symbols on screen
- Reset reminder

11. Remove any jammed coins.

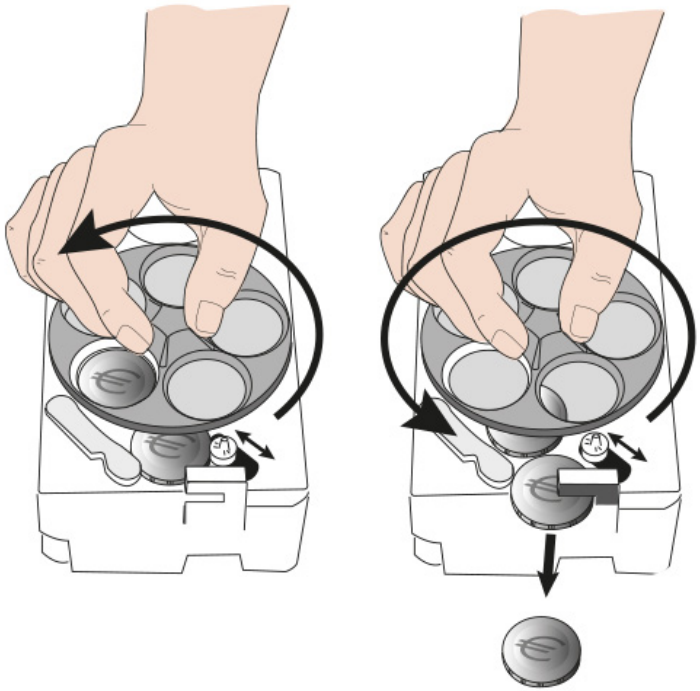

12. Put all the coins back in the dispenser hopper
13. Replace the coin dispenser unit.
14. Replace and lock the front cover and close the top cover.
15. **Reset** the coin dispensers.

Press to select

- Start RCS 400
- Shut down/Restart
- Start PC POS
- Pick up transport box
- Troubleshooting
- Clean CAM
- Error handling
- Coin jam in CAM
- Coin dispenser jam
- PC POS, load paper
- Error list
- Symbols on screen
- Reset reminder

Load Paper POS PC

1. Open the cover by releasing the lock.

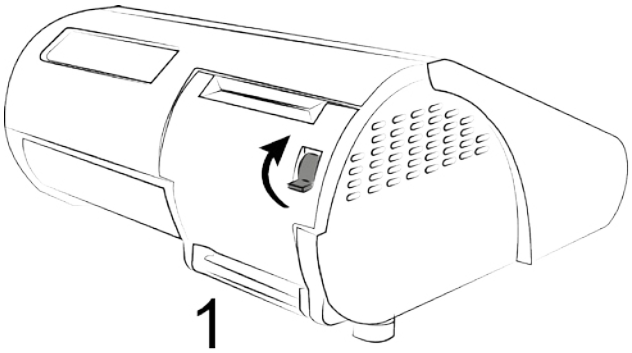

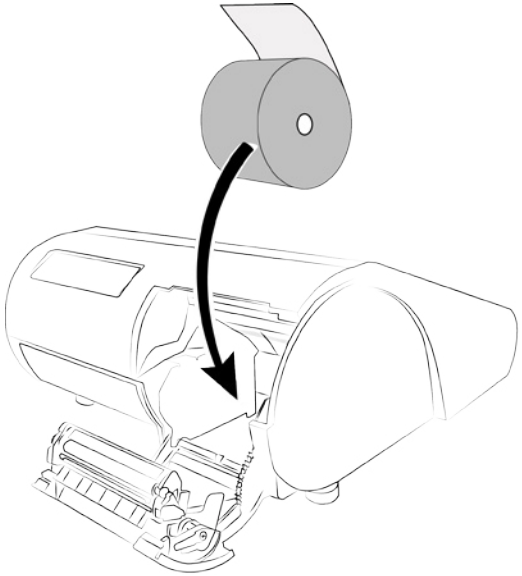

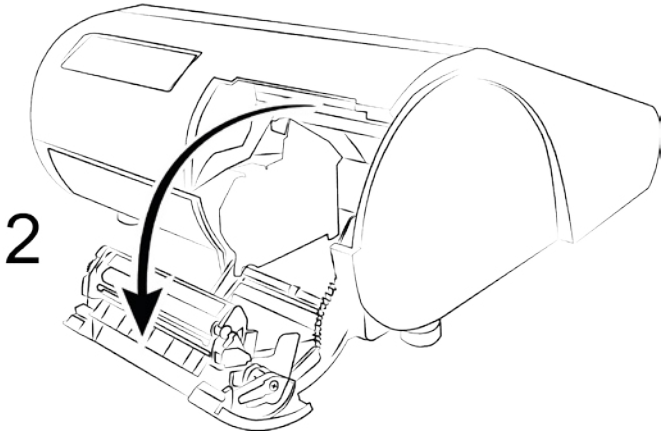

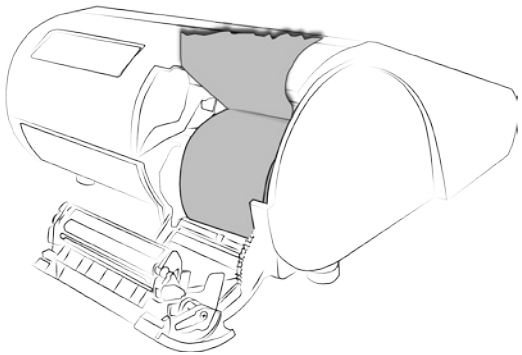

2. Remove any old paper and paper roll.
3. Position the new paper roll so that it unrolls correctly.
4. Close the printer.

Press to select

- Start RCS 400
- Shut down/Restart
- Start PC POS
- Pick up transport box
- Troubleshooting
- Clean CAM
- Error handling
- Coin jam in CAM
- Coin dispenser jam
- PC POS, load paper
- Error list
- Symbols on screen
- Reset reminder

Error list for CAM

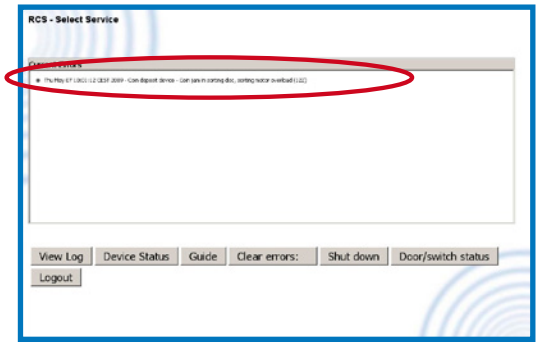

The coin acceptor CAM-errors are listed in the Operating menu.

Note! You have to reset the CAM in the operator menu after solving an error or making a reboot.

Note! When resetting the CAM all the coins in the hopper are rejected to the reject cup.

If there is no action described (*), if the described action does not help or if the fault recurs, contact your SCAN COIN representative.

Code	Description	Action
100-106	A sensor parameter is out of tolerance.	Check for foreign objects or jammed coins between the front sensor and the back sensor.
110	Coin jam on the sorting rail knife or the coin rail.	Remove any jammed coins.
111	Coin jam near the main sensor.	Gently remove any jammed coins.
120	Coin jam in the hopper: feeding motor overload.	Check for any jammed coins in hopper.
122	Coin jam at the sorting disc: sorting motor overload.	Check for any jammed coins.
130-134	General sensor problem	*
135	Coin jam in the hopper outlet.	Check for any jammed coins.
136	Hopper missing.	Check the hopper and connections.
137	-	*
138	Coins left in hopper.	Clear the hopper.
210	Battery to RTC is low	*
500	Plug & Play error.	*
600	Unknown command sent from PC.	*

Press to select

- Start RCS 400
- Shut down/Restart
- Start PC POS
- Pick up transport box
- Troubleshooting
- Clean CAM
- Error handling
- Coin jam in CAM
- Coin dispenser jam
- PC POS, load paper
- Error list
- Symbols on screen
- Reset reminder

601	Time-out in sent command from PC.	Information only.
602	Error in command sent from PC.	Information only.
603-604 609 612-613	RS232 error.	Wait. Restart the machine
610	Unknown command sent from PC.	
611	Error in command sent from PC.	Information only.
614-615	Wrong length in command sent from the PC.	
700	Journal memory error	*
703-707	Could not read/write from the error part in the journal memory.	*
708-709	Flash error.	*
720-722	Set up error.	*
800	Machine was restarted due to a software failure.	*
801	Micro controller failed a check.	Restart the machine
802	Undefined internal software error.	Restart the machine.
900	Coin recording buffer overflowed. Some coins were not recorded.	*
1101	Network MAC address bad	If network is needed call your SCAN COIN representative. Otherwise, unplug the network.
1500-1503	The dongle do not communicate correctly with the CAM.	Make sure the dongle is properly connected. Restart the machine.

Press to select

- Start RCS 400
- Shut down/Restart
- Start PC POS
- Pick up transport box
- Troubleshooting
- Clean CAM
- Error handling
- Coin jam in CAM
- Coin dispenser jam
- PC POS, load paper
- Error list
- Symbols on screen
- Reset reminder

1510-1513	Something is wrong with the dongle set-up.	*
1520-1523	Run-time problems with the dongle.	Restart the machine.
1530	Failed to initialize the journal module properly.	Restart the machine.
1531-1534	Journal problems with the dongle.	*
1540	Failed to initialize the error log module properly.	Restart the machine.
1541-1542	Failed to read/write to the error log in the dongle.	*
1543	Failed to make room for the journal log entries in the dongle memory.	Restart the machine.
1544	Failed to migrate the error log from the old journal flash to dongle flash.	*
1550	Failed to create/read dongle image	Restart the machine.
1551	Failed to restore/write dongle image	Restart the machine.
1552	Failed to erase dongle image	Restart the machine
1600	Failed to enter program flash programming mode when updating from the dongle.	Restart the machine.
9999	More then 10 errors in a row.	*

Press to select

- Start RCS 400
- Shut down/Restart
- Start PC POS
- Pick up transport box
- Troubleshooting
- Clean CAM
- Error handling
- Coin jam in CAM
- Coin dispenser jam
- PC POS, load paper
- Error list
- Symbols on screen
- Reset reminder

Warning Codes from CAM

Code	Description	Action
30110 30111 30135	A near coin jam at the coin rail, near the sensor or at the coin tray.	Only for information.
30200	A receipt has been retracted.	Check for a retracted receipt.
30210- 30212	Paper near end.	Install a new roll of paper.
30300	Answer timed out.	*
30500	All set-up values have been set to default values.	*
30804- 30805	Less then 25% left of stack space.	*
31100	No network connection at start up.	Check the network cable.
31300	Invalid values for Identify settings were sent.	*
31400	Problem reaching host server.	*
31500	A transaction has been ended due to time-out.	Only for information.
31600	Failed to restore the run-time data on first try.	*
31601	Failed to store the run-time data on first try.	*

Status Blue LED Error Code

If the CAM is unable to start-up or if it is unable to continue running for some reason the status LED will blink with one of the following error codes.

If there is no action described (*), if the described action does not help or if the fault recurs, contact your SCAN COIN representative.

Error blink code	Status	Action
Heart beat	Normal	
2	Internal error CPU PCB	*
3	Power supply voltage to low	Check connections.
4	Machine model not defined	Make sure the dongle is correctly connected.
5	Internal error CPU PCB	*
6	Missing or incorrect software	*
7	Bootloader error	*
8	Dongle error	Make sure the dongle is connected properly.
9	Stack overflow	*

Press to select

- Start RCS 400
- Shut down/Restart
- Start PC POS
- Pick up transport box
- Troubleshooting
- Clean CAM
- Error handling
- Coin jam in CAM
- Coin dispenser jam
- PC POS, load paper
- Error list
- Symbols on screen
- Reset reminder

Symbols on screen

Status/Description-	
A red and full basket/Machine is full. Dispensing is no problem. Depositing is not recommended. Select another machine if possible. Call your supervisor.	
A yellow and almost full basket/High level in the machine Dispensing is no problem. Depositing is not recommended. Select another machine if possible. Call your supervisor.	
A red and almost empty basket/ The machine is out of one or more denominations Depositing is no problem. At dispensing may one or more denominations in a predefined mix be missing. Select another machine if available or use the “Fill up an incomplete mix” function.	
A yellow and almost empty basket/Low level for one or more denominations Depositing is no problem. At dispensing may one or more denominations in a predefined mix be too low. Select another machine if available or use the “Fill up an incomplete mix” function.	
Time to clean the machine.	

Press to select

- Start RCS 400
- Shut down/Restart
- Start PC POS
- Pick up transport box
- Troubleshooting
- Clean CAM
- Error handling
- Coin jam in CAM
- Coin dispenser jam
- PC POS, load paper
- Error list
- Symbols on screen
- Reset reminder

Reset reminder

1. **Clean the CAM**.
2. Press Start in idle mode.
3. Log on by entering administrator ID.
4. Press the Administration and then Operator view-button.

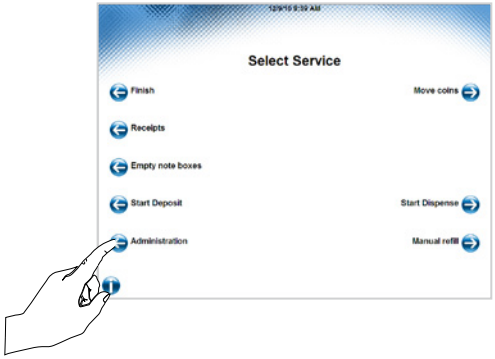

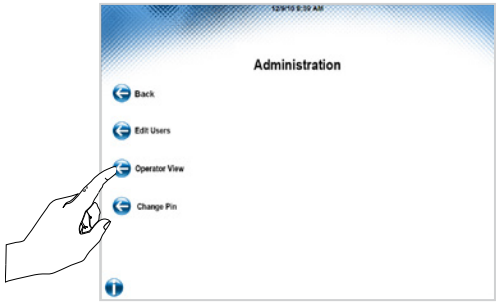

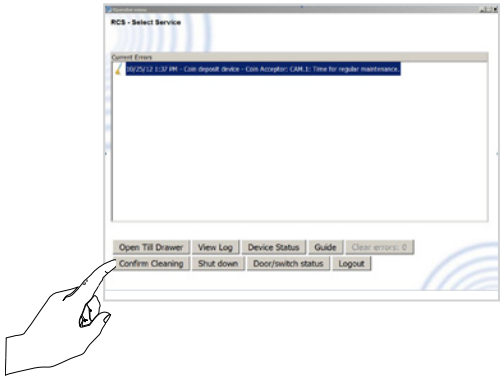

Note After a reboot always reset the CAM in the operator menu, see **Error handling**.